DL-QGZ50-W1 DL-QGZ80-W1 DL-QGZ100-W1

GASOLINE WATER PUMP

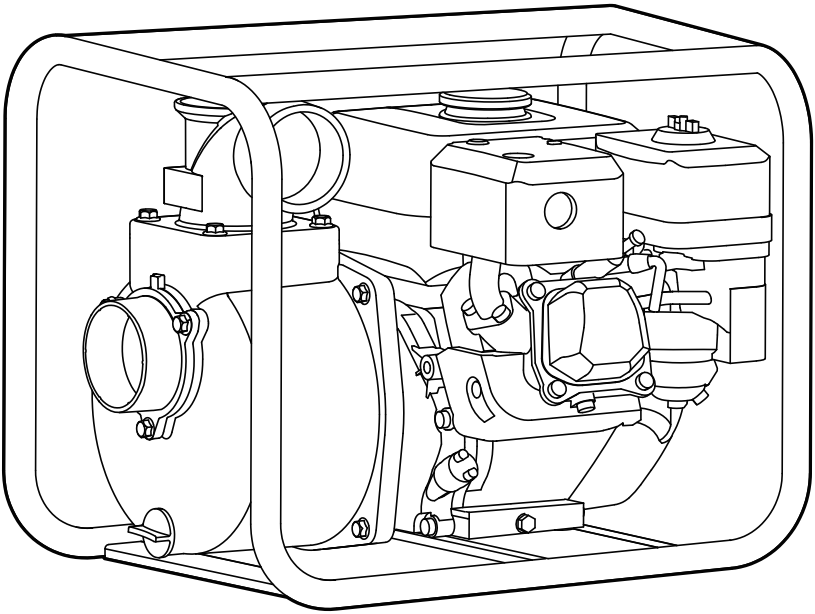

Please read this manual carefully before use
and keep it in a safe place

Ⅰ. General Safeguards

Safety Precautions

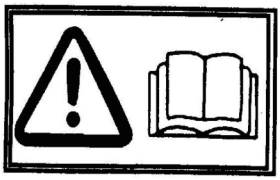

Please read this operation manual to have a thorough understanding of the content there before use the product. Failure to do so may lead to personal injury or mechanical damage.

Before starting the engine, perform inspections according to the procedures described on pre-operation inspections to avoid accidents and damage to your machine.

For safety, never attempt using this GEP (gasoline engine powered) water pump to deliver inflammable or corrosive liquids (such as gasoline and acids). Likewise, corrosive mediums, seawater, chemical solvents, alkaline liquids (such as used gasoline, liquor and honey) should be avoided.

Place the water pump on a solid, level position surface to avoid tilting or turnover that may give rise to spilling of fuel.

To prevent fire hazards, keep the pump well ventilated during operation and maintain a distance of at least 1 meter between the machine and the wall or other machines. Keep away from inflammable substances.

Do not allow children and pets to enter the working area as this may increase the chance of their getting burned by hot surfaces of the operating parts.

Know how to stop the water pump quickly how to operate the controls. Do not use the pump against the prescribed operating rules.

WARNING:

Safety Precautions

The gasoline fuel is highly inflammable and may explode under certain conditions.

Do the fueling with the engine shut down and in a well-ventilated environment. No smoking is allowed and no open fire or sparks allowed to exist in areas where fueling is carried out or the fuel is stored.

Do not allow the fuel to overflow the fuel tank. Be sure to recap the

tank and tighten it after refueling.

When fueling, take care not to spill the gasoline about as the gasoline vapor may easily get ignited to cause a fire hazard. Be sure to remove the spilled gasoline as by wiping before starting the engine.

Do not run the engine indoors or in a poorly ventilated space as the exhaust gas produced by the running engine contains toxic carbon monoxide that may cause the loss of personal consciousness or even death.

Ⅱ. Location of Component Parts

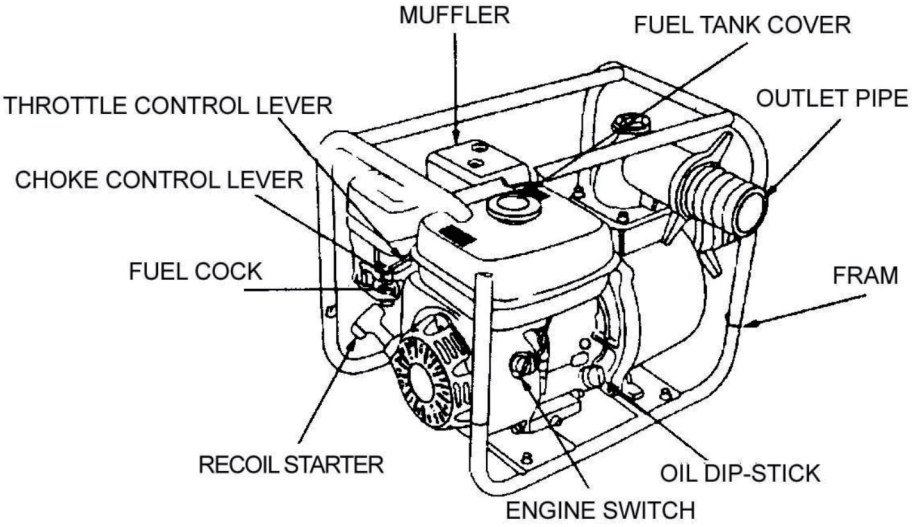

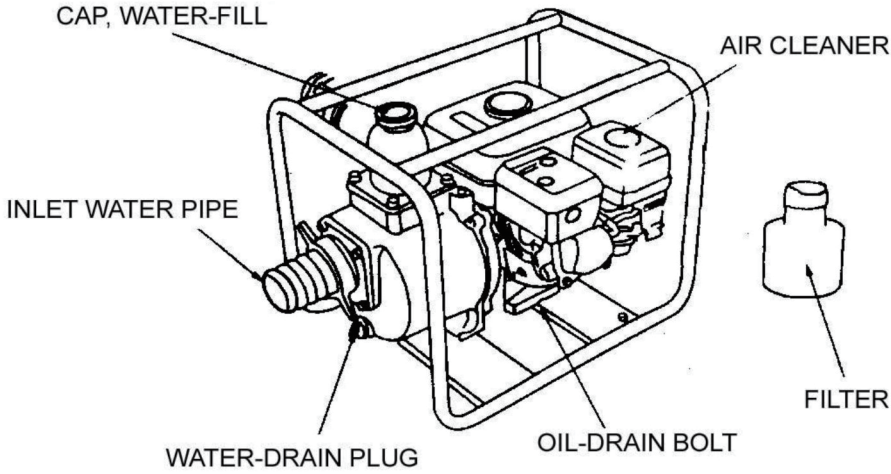

Ⅲ. Operation before Starting Up

1. Connecting the water inlet

Connect the water inlet with a commercially available hose, connector and fastener clip. The inlet hose must be a continuous non-foldable structure with a length not more than required and should be placed near to the source of water so as to achieve the pump should be fitted to the end of the hose with the hose connector as shown in the figure below.

CAUTION: Before pumping water, attach the filter to the end of the hose to filter out foreign matters in the water, the presence of which may cause clogging and damage to the wane wheel.

NOTE: The hose connector and fastener clip should be securely fastened to prevent air leaks and reduction in suction power. A loose hose will reduce the pump performance and self-suction capacity.

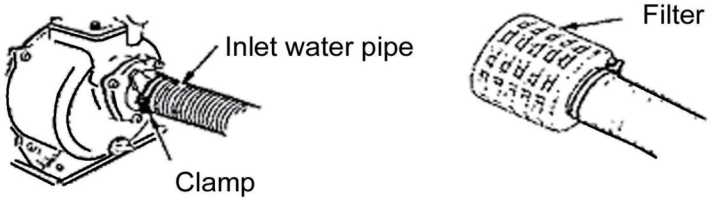

2. Connecting the water outlet

Connect the water outlet with a commercially available hose, hose connector and fastener clip. Large diameter hoses are the most effective while small ones will increase the flow resistance and reduce the output power of the pump.

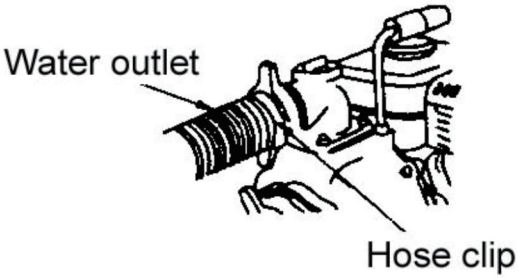

NOTE:

Be sure to the fastener clip is securely fastened to prevent the outlet hose from coming off under high water pressure.

3.Checking the oil level

CAUTION:

• The oil is one of the major factors affecting engine performance and life. Do not use dirty oil or vegetable oil.

• Be sure to check the oil level with the engine shut down and placed on a level surface.

Please use the SE15-40, 4-stroke engine oil as recommended.

Please use the type of oil with a proper viscosity according to the local average temperature.

Oil shortage alarm system (OSAS) (installation position)

The OSAS is designed to avoid damage of the engine due to the shortage of oil in the crankcase. The system will automatically shut down the engine just before the crankcase oil level drops down to the minimum line of safety (with the engine switch staying in the ON position).

If the engine is shut down and cannot be started again, check the oil

level before initiating further troubleshooting procedures.

Remove the oil dipstick and wipe it dry.

Insert the dipstick into the oil filler but not screw it in.

Replenish the crankcase with the recommended type of oil until the oil level comes up to the upper most position of the refilled if the existing oil level is found too low.

CAUTON:

• Running the engine at a low oil level will cause damage to it.

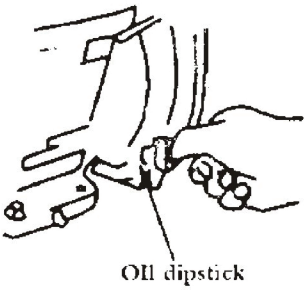

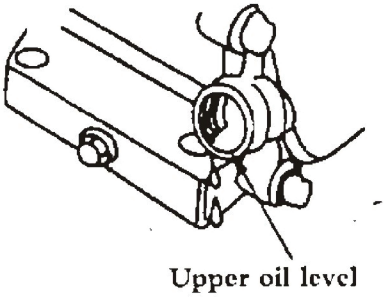

4. Checking the fuel level

Uncap the fuel tank and check the fuel level. Pouring gasoline if the fuel level is found too low.

Please use the type of gasoline recommended by the Dealer (Using the low lead content or lead-free gasoline type is good for minimizing carbon deposits inside the combustion chamber).

Do not use a mixture of gasoline and oil or dirty gasoline to prevent dirt, dust or water from entering the fuel tank.

CAUTION:

•The gasoline fuel is highly inflammable and may explode under certain conditions.

• Do the fueling with the engine shut down and in a well-ventilated environment. No smoking is allowed and no open fire or sparks allowed to exist in areas where fueling is carried out or the fuel is stored.

• Do not allow the fuel to overflow the fuel tank. Be sure to recap the

tank and tighten it after refueling.

• When fueling, take care not to spill the gasoline about as the gasoline vapor may easily get ignited to cause a fire hazard. Be sure to remove the spilled gasoline as by wiping before starting the engine.

• Avoid frequent or extensive exposure of the skin to gasoline or breathing in the gasoline vapor. Keep the gasoline out of the reach of children.

• Fuel tank capacity: 3.6 liters

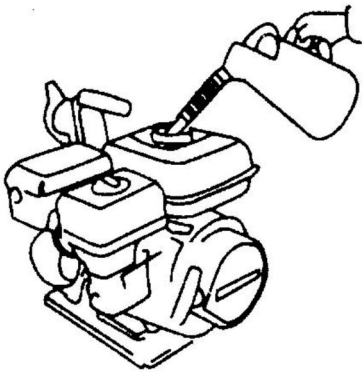

5. Checking the air cleaner filter element

Screw the wing nut and remove the washer and cleaner cover.

Check the filter element to see if it is too dirty and clean it if necessary.

CAUTION:

• Do not run the engine without the air cleaner as this may quicken engine wear if dirt or dust is sucked into the engine through the carburetor.

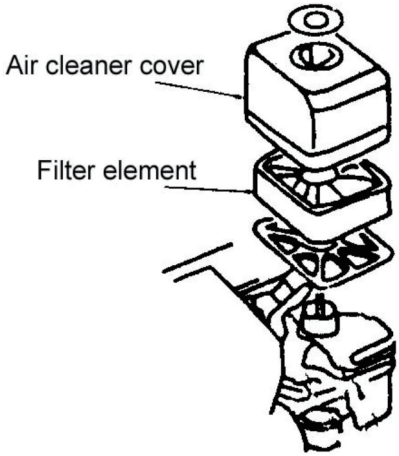

6. Checking and filling the pump with cooling water

The pump must be filled with water before it is put to operation.

CAUTION:

• Do not attempt running the pump without cooling water or the pump will get overheated. Extensive running without cooling water may also damage the air tightness of the pump. If the pump is found running dry, stop the engine and pouring in water when it cools down.

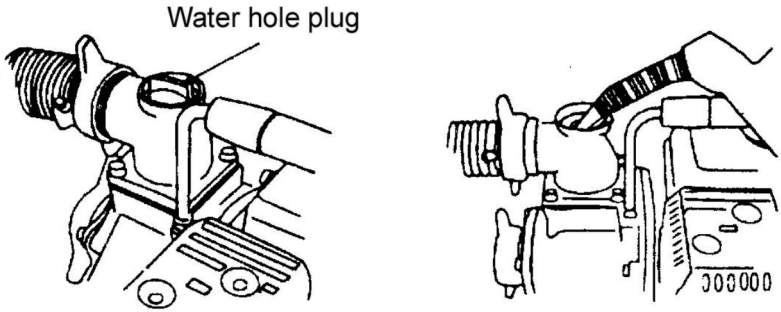

Ⅳ. Starting engine

1. Turn on the fuel tap (by setting it to the ON position).
2. Close the choke.

NOTE:

• The choke is not required when starting the engine warm or the ambient temperature is rather high, (i.e. keep the choke open when starting the engine).

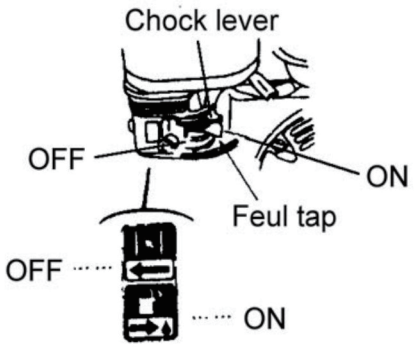

3. Set the engine switch to the ON position.

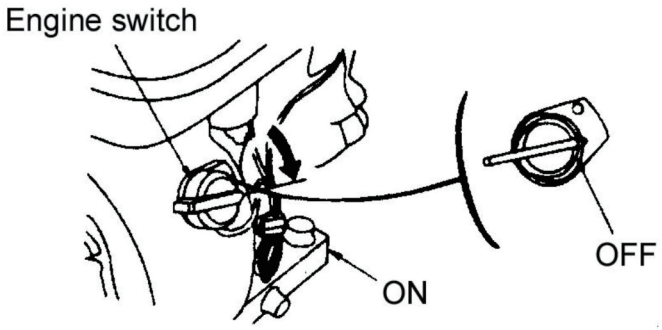

4. Turn the throttle control lever slowly to the left.

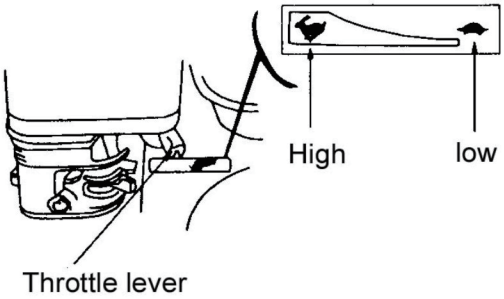

5. Gently pull up the starter lever until a resistance is felt and then quickly pull it up.

CAUTION:

• Do not allow the starter lever to retract quickly into the engine. Let it go back gently to avoid damaging the starter.

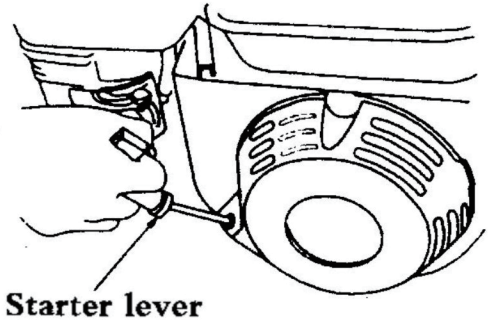

V.Use in Highland Areas

Operation in Highland Conditions

In highland areas (with a high ASL elevation), the air-fuel mixture produced by a standard carburetor will be too thick and result in a reduced engine performance and soared fuel consumption. For operation in highland areas, the engine performance may be increased by using a smaller diameter carburetor nozzle and readjusting the carburetor idle speed. If the water pump is frequently used in areas with a ASL elevation

of more than 1800 meters (6000 feet), ask the local dealer to replace or readjust the carburetor beforehand. Even if the engine is fitted with a carburetor nozzle of an appropriate size, the engine power will still go down by about 3.5% each time when the ASL elevation goes up by 305 meters (1000 feet). If no replacement or readjustment is ever made of the carburetor, the highland effect of the engine output power will be even more obvious.

CAUTION:

• Using the water pump in areas where the ASL elevation is lower than suitable for the carburetor nozzle will lead to a decreased engine performance and overheating of the engine and even cause serious damage to the engine due to an extremely thin air-fuel mixture.

Ⅵ. Operation of the Water Pump

1. Gradually open the choke after the engine warms up.

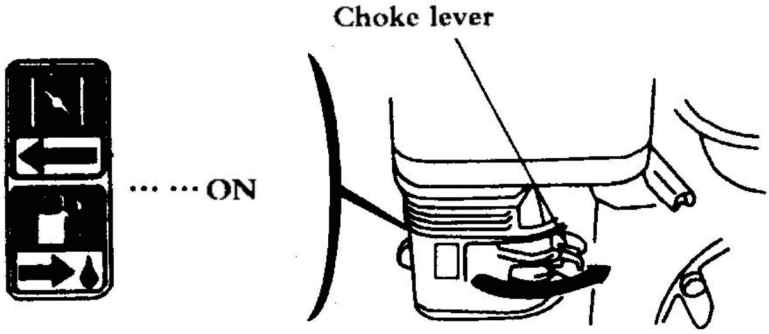

2. Set the throttle to the predetermined RPM.

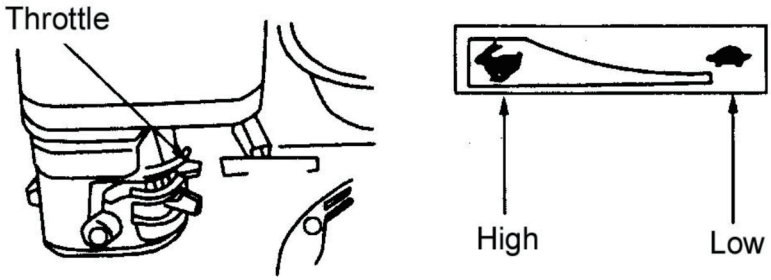

Ⅶ. Shutting Down the Engine

1. Set the throttle control lever to the right end.
2. Set the engine switch to the OFF position.

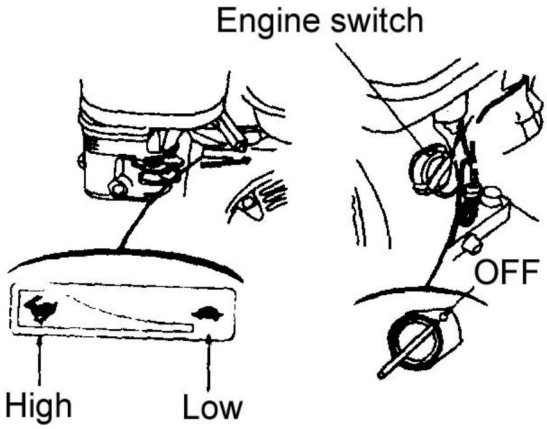

3. Turn off the fuel tap (by setting to the OFF position).

NOTE:

• To shut down the engine in an emergency, simply set the engine switch to the OFF position.

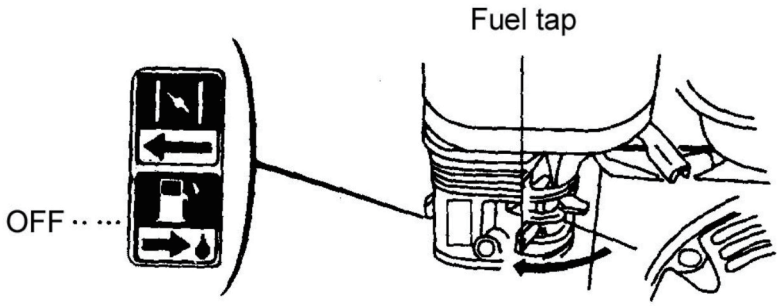

Ⅷ. Maintenance

Periodic inspections and fine-tuning are simply indispensable to keep the water pump working with high performance and regular maintenance may also lengthen the pump life. Supplied in the table on the next page are intervals at which the schedules maintenance jobs are to be done.

WARNING:

• Before any maintenance attempt, be sure to shut down the engine. If the maintenance job has to be done with the engine at work, it should take place in a well-ventilated space as the exhaust gas contains toxic carbon monoxide that causes the loss of personal consciousness or even death.

CAUTION:

• In cases when the pump is used to suck up seawater, be sure to flush it with fresh water immediately after use to minimize corrosion and remove deposits.

• Always use the original parts and relevant tools supplied with the machine to carry out maintenance. Failure to do this may cause damage to the pump.

NOTE:

(1) Inspection and maintenance should take place more frequently if the pump is used in a dirty environment.

(2) Leave the following inspection and maintenance jobs to the authorized dealers unless you, the user, have the relevant tools and necessary DIY skills. In the latter case, refer to service manual.

Table of Maintenance Schedules

Item / Normal maintenance period	Each time	Per month or 20 hours	Per month or 50 hours	Per month or 100 hours	Per month or 300 hours
Check engine oil lever	O				
Replace engine oil lever		O		O	
Air cleaner check	O				
Air cleaner for clean					
Spark plug			O		O*
Fuel supply	**Replace per every two years**				
Wane wheel					O*
Pump case cover					O*
Water inlet					O*

Note: "*" items will be maintained with the help of dealers from general power machinery Co., Ltd.

1. Replacing the engine oil

Oil drains easily and quickly while the engine is warm.

1. Remove the oil dipstick and drain bolt to let out the oil.
2. Screw the drain bolt back in place and tighten it.
3. Pour in clean oil until the desired level is reached.

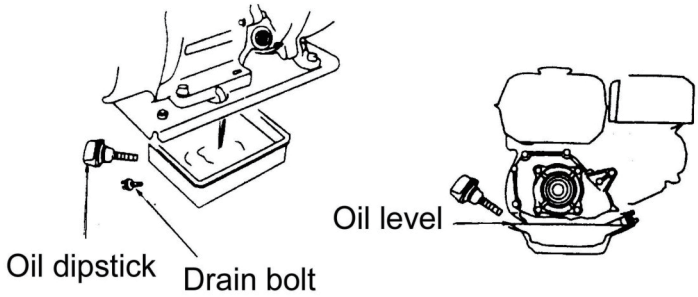

Oil sump capacity: 0.6 liters

Clean the hands with soap if stained with the engine oil.

NOTE: Be sure to keep the environment clean when disposing used engine oil. We suggest you collect the waste oil in a container to be sent to a waste disposal site or a recycling service center of spill it in the garbage or on the ground.

2. Maintaining the air cleaner

A dirty air cleaner will let less air into the carburetor. To prevent carburetor malfunctions, be sure to maintain the air cleaner periodically. More frequent maintenance of the air cleaner will be necessary if the pump is working in an extremely dirty environment.

DO not clean the air cleaner with a low ignition point solvent because it may get enflamed or even explode under certain circumstances.

CAUTION: Do not use the water pump without an air cleaner. The dirt or dust if sucked into the engine may quicken engine wear.

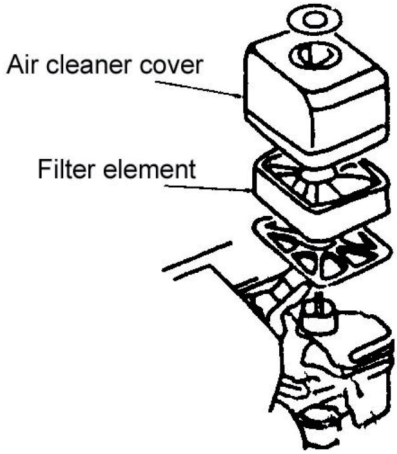

1) Unscrew the wing nut and remove the air cleaner cover and filter element.

2) Clean the filter element with a detergent solution inflammable or with a high ignition point and let it dry thoroughly after cleaning.

3) Immerse the filter element into clean oil and then squeeze out the excessive amount of oil.

4) Put the filter element as well as the air cleaner back in place.

3. Maintaining the spark plug

The recommended type of spark plug is NHSP LD P6RTCU.

To ensure normal operation of the engine, the spark plug should have a correct gap and should remain free of carbon deposits.

1) Remove the plug cap.

The muffler may be very hot if the engine is still running. Take care not to touch the muffler.

2) Check the spark plug visually. Discard the spark plug if it is obviously worn out or the insulation ring on it is broken or cracked. Clean the spark plug with a brush when put it back in place.

3) Check the plug gap with a feeler gauge.

Vary the gap by moving the side electrode.

Normal plug gap: 0.70~0.80mm

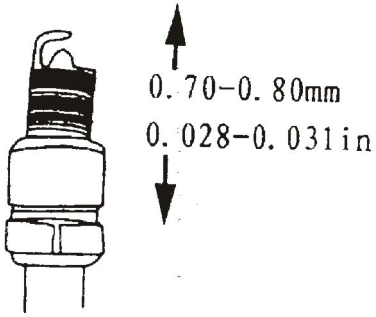

4) Check the plug O-ring for normal condition. Screw it in with the plug wrench to protect the plug thread.

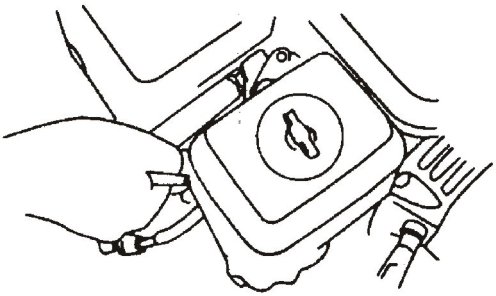

NOTE:

• In the case of screwing in a new spark plug, tighten it by an additional 1/2 screw turn after the plug reaches and pushes on the O-ring, while in the case of a used spark plug, an additional 1/2~1/4 screw turn is necessary.

CAUTION:

• Make sure the spark plug is properly tightened. Improper tightening may cause the engine to be overheated or damaged. Never use spark plugs with an incorrect thermal value range.

Ⅸ. Transportation and Storage

CAUTION:

• To avoid causing a fire hazard, let the engine cool down before transportation or indoor storage of the pump.

• Before transporting the pump, set the fuel tap to the OFF position and place the pump body in a level position to prevent the fuel from spilling out. The spilled gasoline or the gasoline vapor may get ignited.

Note and do the following before storing pump for an extended period of time:

1) Make sure the storage area is free of moisture or dust.

2) Ch\lean the inside of the pump.

The pump may get clogged if it is used to suck up water containing such matters as earth, sand or heavy fragments.

Before storing, clean the pump by sucking up clean water or otherwise the wane wheel may be damaged when the pump is put to use again. After cleaning, unscrew the water drain plug to drain off the water from inside the pump casing as much as possible. Then screw the drain plug back into place.

3) Drain off the fuel.

a. Turn off the fuel tap (OFF position), unscrew the drain screw from the carburetor float chamber to drain off the fuel from inside the carburetor and collect the gasoline in a suitable container.

b. Turn on the fuel tap (ON position) and collect the gasoline in a suitable container.

c. Screw the carburetor fuel drain screw back into place.

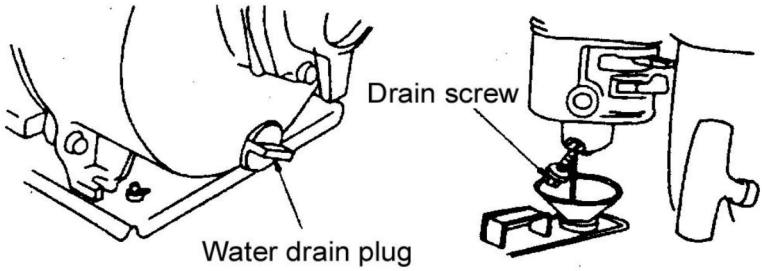

4) Replace the engine oil.

5) Screw off the spark plug, pour a spoonful of clean oil into the cylinder, turn the engine alternatively for several times to allow uniform distribution

of oil, and then screw in the spark plug again.

6) Pull up the starter lever until a resistance is felt. Stop pull for a while and pull it up again until the triangle mark on the starter wheel gets into collimation with the screw hole in the starter (as shown the sketch below). In this position, both the inlet valve and outlet valve is closed to prevent corrosion inside the engine.

7) Cover up the pump to keep out dust.

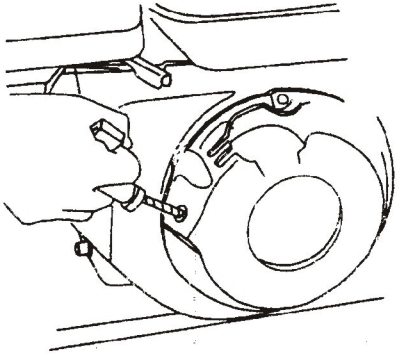

X. Troubleshooting

Engine unable to get started:

1) Is there enough fuel?

2) Is the fuel tap turned on?

3) Has the fuel reached the carburetor? Make the check by unscrewing the oil drain screw from under the carburetor with the fuel tap turned on.

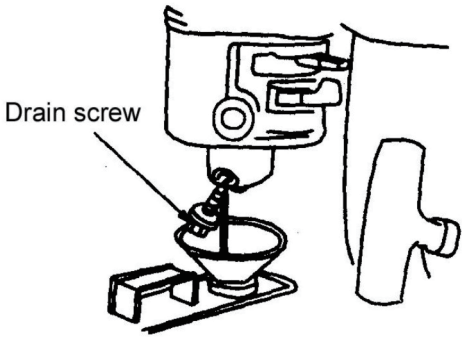

WARNING:

• Should there be a spill of fuel, be sure to clean it before checking the spark plug and start the engine or otherwise the spilled fuel or fuel vapor may get ignited

4) Is the engine switch set to the ON position?

5) Is there enough oil in the crankcase?

6) Is the spark plug generating sparks?

a. Uncap the spark plug, clear off the dirt from around the plug and remove the spark plug.

b. Fit the spark plug into the plug cap.

c. Turn on the engine with the side electrode and pull up the starter lever to see if there is sparks generated.

d. Ground the engine with the side electrode and pull up the starter lever to see if there is sparks generated.

e. Replace the spark plug if no spark is found.

Start the engine as directed in the operation manual if sparks are generated.

7) If the engine still refuses to get started, send the pump to any of the authorized dealers.

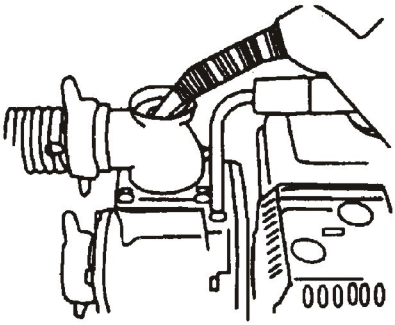

The pump unable to such up water:

1) Is it filled with enough amount of water?

2) Is the filter clogged?
3) Is the hose fastener clip tightened?
4) Is the hose damaged?
5) Is the suction head too high?
6) If the pump still fails to work, send it to any of the authorized dealers.

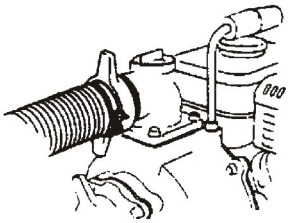

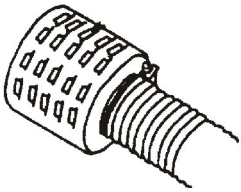

Product Warranty Card

Dear users :
Thank you for buying our products. In order to ensure your profit, users who buy our products can contact local distributor or Specified repair stations with invoice and warranty cards if the product failures due to quality problems.

Warranty Notice:

1. From _____ (Year/Month/Day) to _____ (Year/Month/Day),If the failure happen in normal use, our company will provide free warranty, parts replacement and other services according to the failure situation.
2. This warranty card and purchase invoice are the voucher of after-sales service provided by our company to customers. The card must be detailed only after filling in the following form and affixing the official seal with the distributor.
3. In one of the following cases, free warranty service will be invalid, and maintenance fees will be required:
   (1) Exceed the expiration date.
   (2) Failure or damage caused by not following the requirements of the product manual, maintenance or improper storage.
   (3) Failure or damage caused by disassembling, repairing or modication of the product without the permission of our company.
   (4) Machine breakdown or damage caused by force majeure.
   (5) Consumable accessories.

This card is issued with the product. One card for one machine, to ensure that you can fully enjoy the right to free warranty service provided by the company, please keep this card properly, lost will not be replaced.

Purchase Date: _____ (Year/Month/Day)

Product Certificate

Inspector:

01

Date of manufacture:

NINGBO DELI TOOLS CO., LTD.
No. 128 Chezhan West Road, Huangtan Town,
Ninghai County, Ningbo, Zhejiang, China
delitoolsglobal@nbdeli.com
www.delitoolsglobal.com
+86 574 87562689
MADE IN CHINA

22
PAP